MEIDEN

JB54-1700B

# Starting Controller and Resistor

## For Wound-Rotor Induction Motor

MEIDEN

MEIDENSHA CORPORATION

## For Wound-Rotor Induction Motor
# Starting Controller and Resistor

The starting controller and resistor are used for the resistance-start of a 3-phase wound-rotor induction motor. Two different starting controllers are available, a manual type and a motor-operated type, and both have the same type of contacts which are actuated by cams revolving on a shaft. The starting resistor is a grid type metal resistor.

The starting controller and resistor should be ordered together since the control taps and the corresponding resistance must be well matched with the characteristics of the motor to be started.

Other products in the same series for speed control are also available to meet your requirements.

Fig. 1 CS-208 Manual Type Starting Controller

Fig. 2 CSM-4090 Motor-operated Starting Controller

Fig. 3 Indoor Open Type Starting Resistor



Starting Controllers

Table 1 Standard Specifications

| Operating system | Type | Applicable motors | | | Specification of motor-operated mechanism | | | | | | Approx-imate Mass [kg] |
|---|---|---|---|---|---|---|---|---|---|---|---|
| | | Output [kW] | Secondary voltage (Max.) [V] | Secondary current (Max.) [A] | No. of notches | Operating time (sec) 50 Hz | Operating time (sec) 60 Hz | Operating motor output [W] | Control source | Operating magnetic contactor | |
| Manual | CS-208 | 300 | 900 | 200 (300) | 8 | – | – | – | – | – | 19 |
| Motor-operated | CSM-4090 | 400 | 1,000 | 360 | 9 | 26 | 22 | 60 | AC 200/200/220 50/60/60 Hz | Equipped | 60 |
| | CSM-4090-E | 400 | 1,000 | 360 | 9 | 26 | 22 | 60 | | None | 60 |
| | CSM-8130 | 2,000 | 1,800 | 800 | 13 | 38 | 32 | 60 | | Equipped | 180 |
| | CSM-8130-E | 2,000 | 1,800 | 800 | 13 | 38 | 32 | 60 | | None | 180 |

< **Note** >
1. Shorting method of the starting resistor is unbalanced shorting. Final notch of the manual type is balanced shorting.
2. Outputs of the applicable motors are reference values. Decide the application according to the secondary voltage and current.
3. Applicable secondary current for the manual type is 200A when continuously energized. When a secondary short-circuit device is equipped to the motor, the secondary current is 300A since it is energized for a short time.
4. Operating time for the motor-operated type is the value for continuous operation.
5. As for operating voltage of the motor-operated type, models for 400/440 V can be manufactured on special specifications.
6. When the load $GD^2$ is large, use a current relay or timer together with this apparatus.

# Manual Operated Cam Type Controllers

## Features

(1) Contacts are actuated reliably by cams revolving on a shaft.
(2) Contacts are of a unit switch type which makes maintenance and inspection easy.
(3) Operating handle works easily at a touch.
(4) Notch stop mechanism is very dependable.

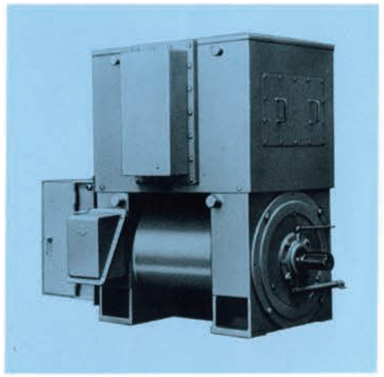

## Construction

Fig. 4 CS-208 Type Manual Starting Controller

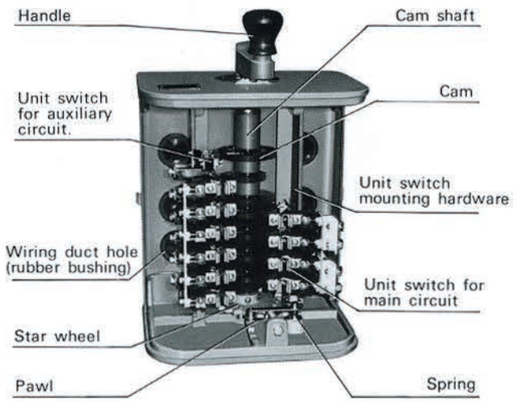


Fig. 5 Inside View of CS-208 Type Manual Starting Controller

### 1. Overall structure

The starting controller is an enclosed structure intended for wall mounting. Since the unit switches are arranged in position around the cam shaft, the overall size is very compact. Incoming wires are led through the wiring duct provided at the rear, but terminal connections can easily be done since terminals are all located at the front of the controller.

### 2. Contact Mechanism (Unit switch)

Each unit switch is held to the mounting support by a single bolt as shown in Fig. 6. Each unit has a capacity of 100 A. In the last stage of tapping, 2 units are placed in parallel so that 200 A can be applied continuously. But if the motor is equipped with a secondary short-circuit device, rated secondary current of up to 300 A can be applied. The cam pushes the roller to open the contactor dependably. Contact pressure is applied from the spring when matching roller positions at the recess of the cam disc. Moving and stationary contacts are easily detachable by means of a screwdriver from the front when the cover of the controller case is opened.

### 3. Start interlock contact

Start interlock contacts are provided to prevent closure of the primary switch while the starting resistor is short-circuited. Switching capacity for these contacts is 10 A at AC 220 V. These contacts are also of unit type and actuated by a cam mechanism. The structure is shown in Fig. 7.

### 4. Manual operating mechanism

The handle lock at the starting position can be released easily by pressing the handle downward, after which the handle can be turned smoothly. The stop notch is reliably engaged by the start wheel.

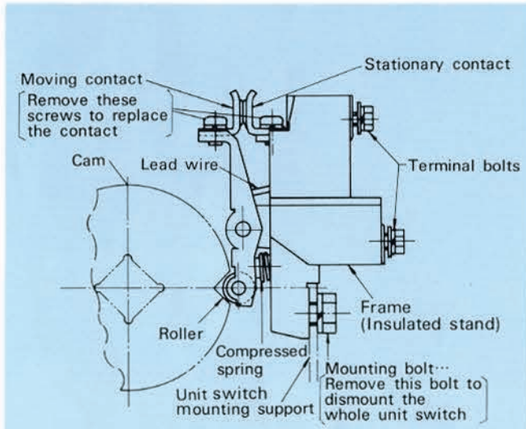


Fig. 6 Unit Switch of CS-208 Main Circuit

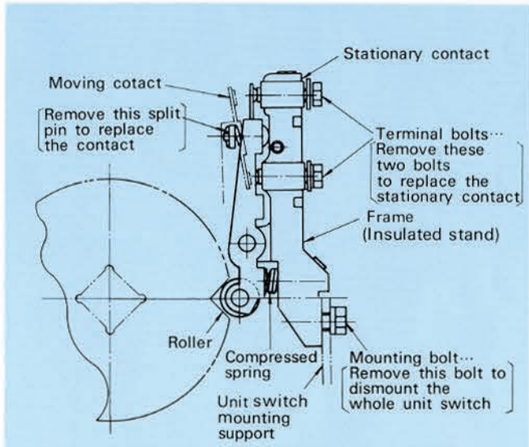


Fig. 7 Unit Switch for Auxiliary Circuit

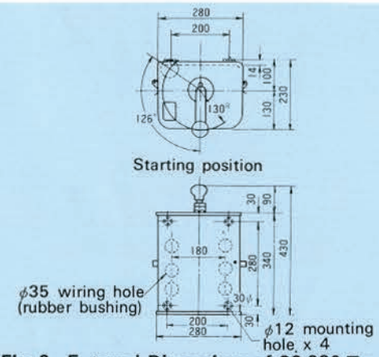


Fig. 8 External Dimensions of CS-208 Type Manual Starting Controller

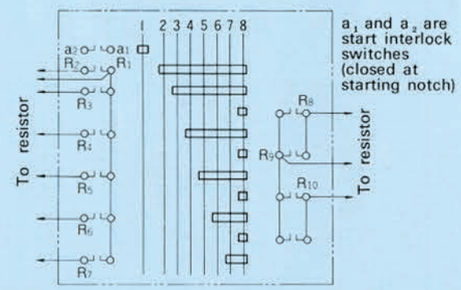


Fig. 9 Connection Diagram of CS-208 Type Manual Starting Controller

# Motor-Operated Cam Type Controllers

The motor-operated type is recommended for large-capacity motors. It is also useful for automated control or remote control, for the purpose of systematizing facilities and/or reducing manpower needs.

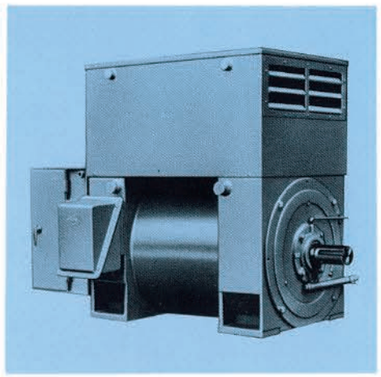

Fig. 10
CSM-4090 Type Motor-Operated Starting Controller

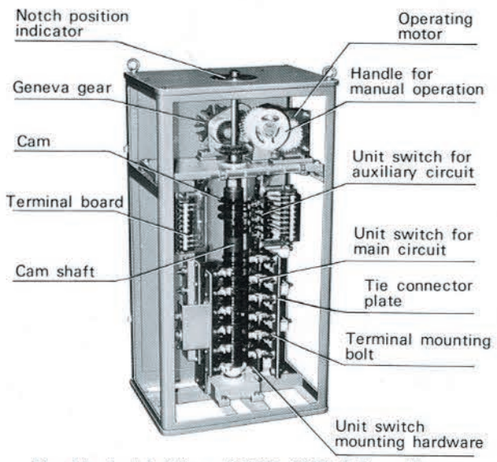


Fig. 11 Inside View of CSM-4090-E Type Motor-Operated Starting Controller

## Features

(1) Contacts are operated by a cam mechanism, offering excellent switching performance.
(2) The contact mechanism is a unit switch type which is easy to inspect and maintain.
(3) The geneva gear provides dependable notching.
(4) Manual operation is also easy and safe since a manual operating handle is equipped.

## Construction

### 1. Overall structure

The contact mechanism and operating mechanism are accommodated in the enclosed steel box for indoor installation. The notch position indicator is located on top of the enclosure.

Since unit switches for the contact mechanism are arranged on both sides of the cam shaft, the controller as a whole is quite compact. Wires are led in through the bottom of the enclosure.

### 2. Contact Mechanism (Unit switch)

The contact mechanism or unit switch is arranged in a unit which can be mounted with a single bolt. The capacity and other details for each unit switch are indicated in Teble 2. The unit switch is actuated by a cam which pushes a laver to open the contacts, and sufficient contact pressure is insured by a compression spring. The contact opening is thus dependable via this mechanism.

Removal of both moving and stationary contacts can be carried out easily by removing just one bolt from the front of the controller.

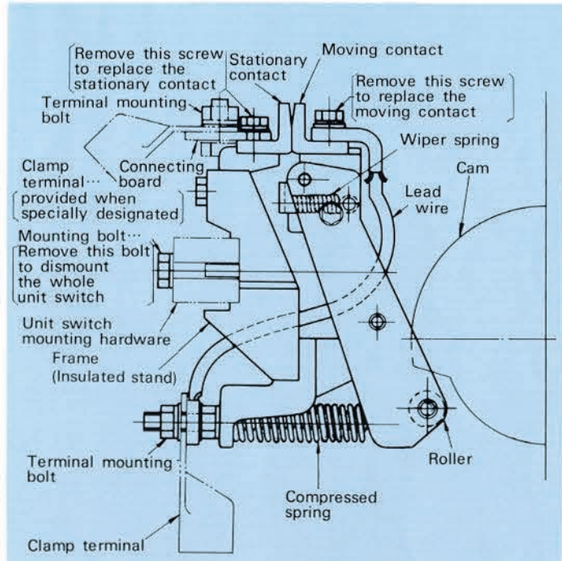


Fig. 12 CSM-8130 and CSM-8130-E Type Unit Switch for Main Circuit

Table 2. Main Contact Ratings

| Type of controller | Continuous current rating (for middle notches) for unit switch | Final notch | | Fig. No. |
|---|---|---|---|---|
| | | No. of unit switches arranged in parallel | Continuous current rating | |
| CSM-4090(-E) | 120A | 3 pcs | 360A | Fig. 6 |
| CSM-8130(-E) | 400A | 2 pcs | 800A | Fig. 12 |

### 3. Auxiliary contact (limit switch)

The auxiliary contact is also built into a unit as shown in Fig. 7. Its switching capacity is 10 A at AC 220 V. The auxiliary contact has the following features.

**(1) Start interlock contact:** This contact is closed only in the off-notch (starting) position. It is used as an interlock for the primary switch.

**(2) Operating notch indicating contact:** It is closed in the final notch position and is used for position indication or for interlocking.

**(3) Limit switch for motor operation:** This is a unit switch for automatic stopping of the operating motor at the final notch (steady operation) or at the off-notch (starting).

**(4) Notch-stop limit switch:** In order to prolong the starting time for a motor with a large $GD^2$, this limit switch stops the operation of the handle once in each notch position.

### 4. Motor-operated mechanism and manual operating handle

A concial brake is adopted for the operating motor. Speed reduction is made by worm gears, and the cam shaft is driven through bevel and geneva gears. The notching is therefore very accurate.

A simple clutch mechanism in front of the bevel gear allows the motor-operating mechanism to be disconnected for manual operation, with the manual handle pulled toward the operator. The manual handle gives a one-notch advance for a single full rotation, thus manual operation is simple.

If the manual handle is pushed back, the motor-operating mechanism is engaged. But the door cannot be closed if the handle is not completely pushed back and the interlock is not released. Therefore the changeover from manual to motor operation cannot be made erroneously. And while the controller is motor-operated, the manual handle will rotate, but there is no danger to the operator since it rotates at a low speed of about 0.4 turn per second.

### 5. Control circuit for operating motor

As shown in Table 1, there are two types of circuits, one with and one without a controlling magnetic contactor.

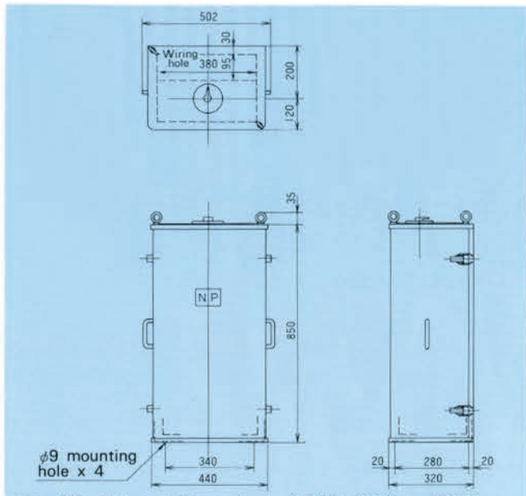


Fig. 13 External Dimensions of CSM-4090 and CSM-4090-E Type Motor-operated Starting Controller

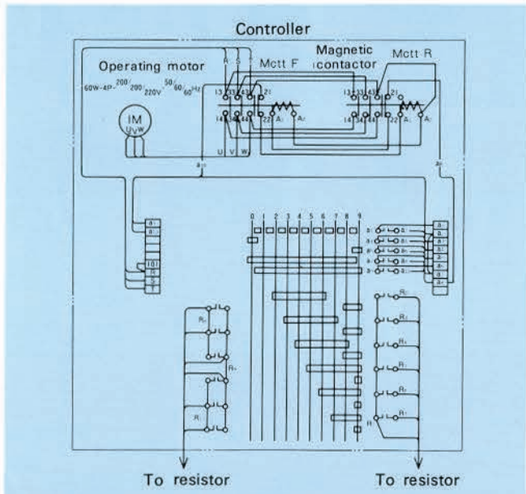


Fig. 14 Connection Diagram of CSM-4090 Type Motor-operated Starting Controller

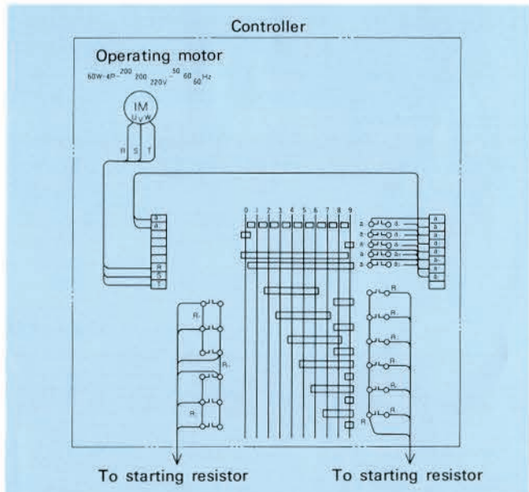


Fig. 15 Connection Diagram of CSM-4090-E Type Motor-operated Starting Controller



## External Dimensions and Connection Diagrams

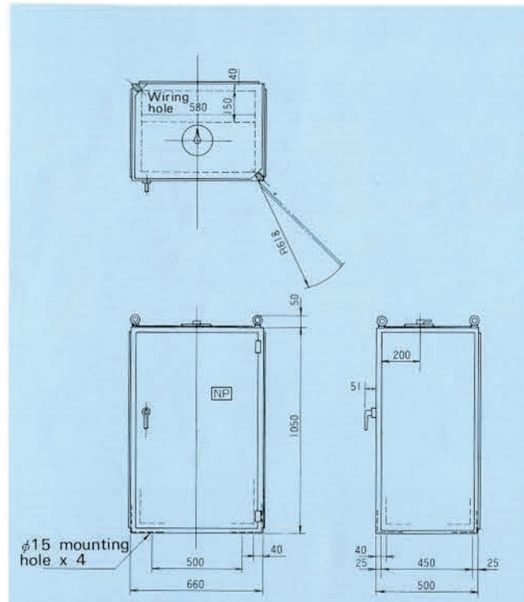


Fig. 16 External Dimensions of CSM-8130 and CSM-8130-E Type Motor-operated Starting Controller

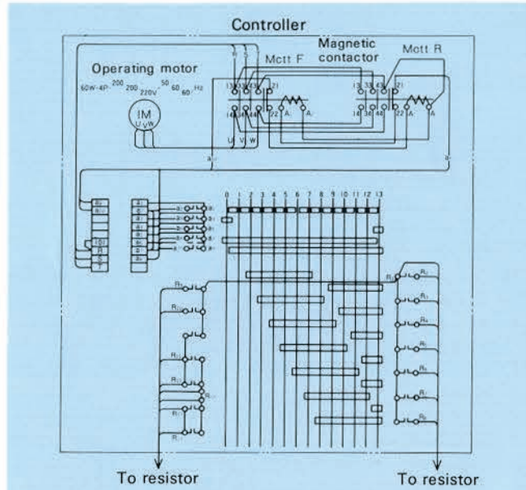


Fig. 17 Connection Diagram of CSM-8130 Type Motor-operated Starting Controller

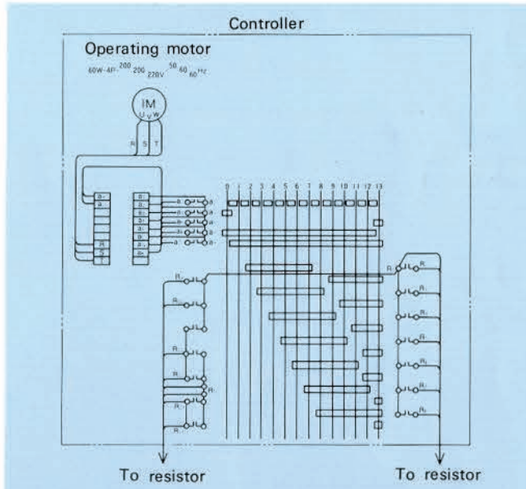


Fig. 18 Connection Diagram of CSM-8130-E Type Motor-operated Starting Controller

**Legend (for Figs. 14, 15, 17, 18)**

| | | |
|---|---|---|
| Mctt F | : | Magnetic contactor for forward revolution of operating motor (to reduce the resistance). |
| Mctt R | : | Magnetic contactor for reverse revolution of operating motor (to increase the resistance). |
| $a_1 a_2$ | : | Contacts for stopping the mechanism in each notch position. |
| $a_3 a_4$ | : | Start interlock contacts. |
| $a_5 a_6$ | : | Operation-notch interlock contacts. |
| $a_7 a_8$ | : | Contacts for automatically stopping the operating motor in each operation-notch position. |
| $a_9 a_{10}$ | : | Contacts for automatically stopping the operating motor in an off-notch (starting) position. |

# Starting Resistors

## Construction

(1) Indoor open type is standard. But other types can be manufactured on request:
   1. Indoor protected type (sides are also covered, with perforated steel plates).
   2. Drip-proof type

(2) The resistor has a tier structure, with 6 tiers at maximum. Those with over 4 tiers will be reinforced with framing.

(3) A protective cover is provided on top to avoid short-circuit failures due to falling objects.

(4) Each terminal is provided with an engraved terminal symbol.

(5) Grid pieces made of high quality cast iron are used as the resistance elements. According to the current capacity, two series of RGK and RGL are available.
(Elements made of steel can also be manufactured on request.)

(6) In the assembly of the resistor, the grids are stacked up with mica sheets inserted in between and they are rigidly mounted to the side plates (clamping plates) by passing an insulating rod through them.

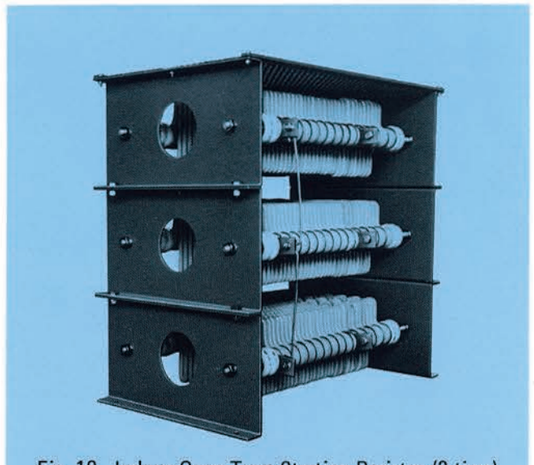

Fig. 19 Indoor Open Type Starting Resistor (3 tiers)

Table 3. Sample Overall Dimensions for Indoor Open Type Starting Resistor

| Motor [kW] | No. of tiers | Dimensions (in mm) | | |
|---|---|---|---|---|
| | | A | B | Fig. No. |
| 55 | 1 | 590 | 220 | Fig. 20 (1) |
| 110 | 2 | 470 | 430 | " |
| 200 | 3 | 590 | 640 | " |
| 300 | 3 | 710 | 640 | " |
| 400 | 4 | 590 | 860 | Fig. 20 (2) |
| 500 | 5 | 590 | 1,070 | " |

< **Note** > This table shows resistor dimensions for outputs (kW) of motors to be operated.

## External Dimensions

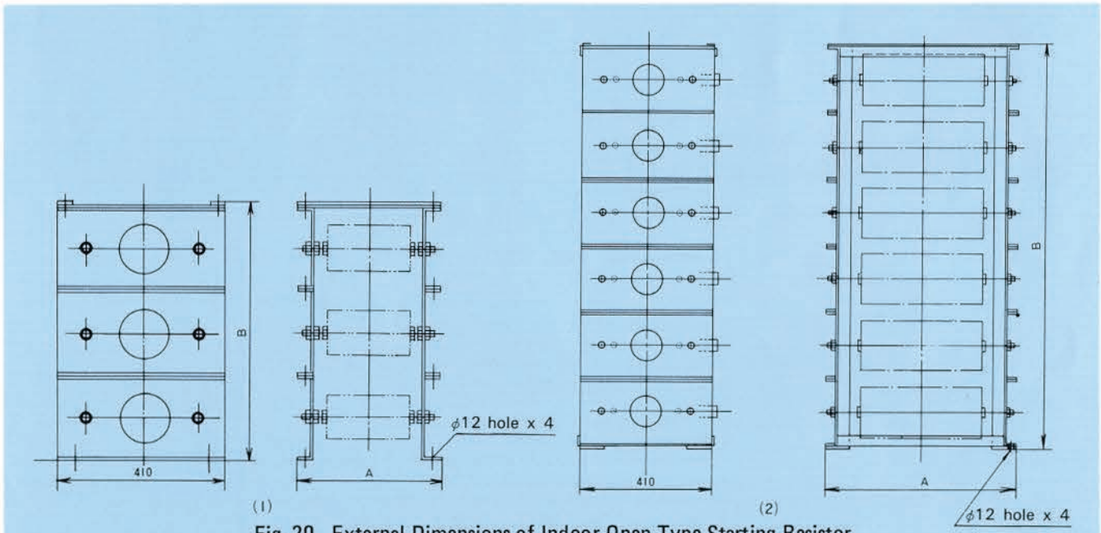


Fig. 20 External Dimensions of Indoor Open Type Starting Resistor

## Application Examples

1. **For manual starting controller**

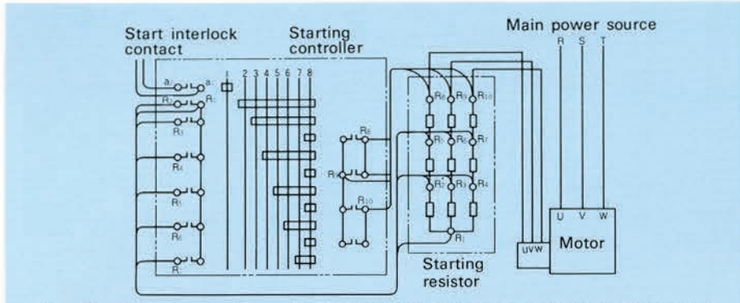


Fig. 21 Example of Connection for CS-208 Type Manual Starting Controller

2. **For motor-operated starting controller (for general loads).**

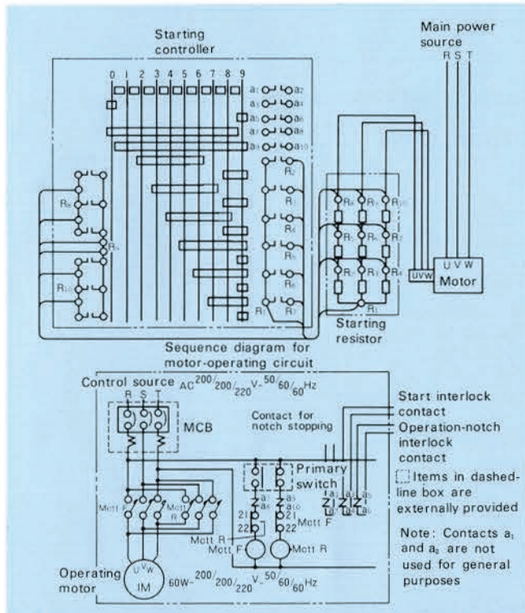


Fig. 22 Example of Connection for CSM-4090 Type Motor-operated Starting Controller (for general loads)

3. **For motor-operated starting controller (for large GD²).**

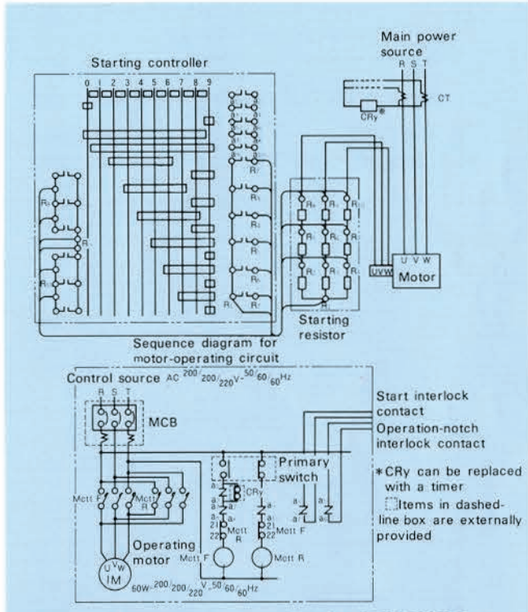


Fig. 23 Example of Connection for CSM-4090 Type Motor-operated Starting Controller (for large GD²)

**Legend (for Figs. 21, 22, 23)**

| | | |
|---|---|---|
| CT | : | Current transformer |
| CRy | : | Current relay |
| Mctt F | : | Magnetic contactor for forward revolution of operating motor (to reduce the resistance). |
| Mctt R | : | Magnetic contactor for reverse revolution of operating motor (to increase the resistance). |
| $a_1$ $a_2$ | : | Contacts for stopping the mechanism in each notch position. |
| $a_3$ $a_4$ | : | Start interlock contacts. |
| $a_5$ $a_6$ | : | Operation-notch interlock contacts. |
| $a_7$ $a_8$ | : | Contacts for automatically stopping the operating motor in each operation-notch position. |
| $a_9$ $a_{10}$ | : | Contacts for automatically stopping the operating motor in the off-notch (starting) position. |

## Information Required When Ordering

At least the following items should be specified:

1. Type and quantity of controllers and resistors required.
2. Output, secondary voltage and secondary current of motor.
3. Usage and operating conditions for motor.
4. For motor-operated types, voltage and frequency of the control source.
5. Others (please designate if a special protective structure is required for the resistor).


## MEIDENSHA CORPORATION

Riverside Building, 36-2, Nihonbashi Hakozakicho, Chuo-ku, Tokyo 103-8515 Japan
Phone: Tokyo 3-5641-7211 Telex: 246-6036 (MEIDEN J) Cable Address: "Meiden Tokyo"
Facsimile: 3-5641-7249


## Overseas Offices & Affiliates (For inquiries, please contact to the office/company marked ※.)


**Hong Kong**

**※MEIDENSHA CORPORATION**
6/F Kerry Godown (Kwai Chung),
4-6 Kwai Tai Road, Kwai Chung, N.T.,
Hong Kong
Phone: 2503-2468
Facsimile: 2887-8046

**MEIDEN PACIFIC (CHINA) LTD.**
6/F Kerry Godown (Kwai Chung),
4-6 Kwai Tai Road, Kwai Chung, N.T.,
Hong Kong
Phone: 2503-2468
Facsimile: 2887-8046

**JARDINE-MEIDEN ENGINEERING CO.,LTD.**
6/F Kerry Godown (Kwai Chung),
4-6 Kwai Tai Road, Kwai Chung, N.T.,
Hong Kong
Phone: 2481-2881
Facsimile: 2487-5039

**Korea**

**※MEIDENSHA CORPORATION**
Royal Building No. 410,
5 Dangju-Dong,
Chongro-ku, Seoul, Korea
Phone: 2-736-0232～3
Facsimile: 2-736-0234

**Indonesia**

**※P.T. MEIDEN ENGINEERING INDONESIA**
19th Floor, Summitmas I,
Jl. Jenderal Sudirman Kaveling 61-62
P.O.BOX 20/KBY/Summitmas I
Jakarta Selatan 12069, Indonesia
Phone: 21-520-0612/1584
Facsimile: 21-520-0240
Telex: 45235 MEIDEN IA

**Malaysia**

**※MEIDENSHA CORPORATION**
22nd Floor, Menara Boustead,
69 Jalan Raja Chulan,
50200 Kuala Lumpur, Malaysia
Phone: 3-248-3776/3669/3896
Facsimile: 3-241-2881
Telex: 30191 MEIDEN MA

**MEIDEN ELECTRIC ENGINEERING SDN.BHD.**
22nd Floor, Menara Boustead,
69 Jalan Raja Chulan,
50200 Kuala Lumpur, Malaysia
Phone: 03-2411424/2427388/2420788
Facsimile: 3-2481613
Telex: 30191 MEIDEN MA

**MEIDEN QUARTZ (M) SND.BHD.**
Lot 5&7, Kawasan Perindustrian Alor Gajah, Peringkat 3, Alor Gajah,
78000 Melaka, Malaysia
Phone: 6-5563987～9
Facsimile: 6-5563986

**MEIDEN METAL ENGINEERING SDN. BHD.**
Lot 6, Peringkat 3,
Kawasan Perindustrian Alor Gajah,
78000 Melaka, Malaysia
Phone: 6-5568790～2
Facsimile: 6-5568795

**Singapore**

**※MEIDEN SINGAPORE PTE. LTD.**
5, Jalan Pesawat, Jurong Industrial Estate, Singapore 619363
Phone: 268-8222
Facsimile: 264-4292
Telex: RS 34494 MEITRA

**MEIDEN QUARTZ (S) PTE. LTD.**
Alexandra Distripark,
Block 2 # 11-18 to 29
Pasir Panjang Road,
Singapore 118481
Phone: 273-1088
Facsimile: 278-6795
Telex: RS 33185 MEWQTZ

**Taiwan**

**※MEIDENSHA CORPORATION**
Room 1103, 11th Floor,
No. 142 Chung Hsiao East Road,
Sec. 4 Taipei, Taiwan, R.O.C.
Phone: 2-2775-3337～8
Facsimile: 2-2775-3339

**Thailand**

**※THAI MEIDENSHA CO., LTD.**
Floor 11, TST Tower Building,
No. 21, Vibhavadi-Rangsit Road,
Chatuchak, Bangkok 10900,
Thailand
Phone: 2-273-8954～61
Facsimile: 2-273-8966
Telex: 84228 THAIMEW TH

**MEIDEN ELECTRIC (THAILAND) LTD.**
896 Moo 2, Bangpa-in Industrial Estate, Udomsorayuth Rd.,
Klongjig, Bang Pa-in,
Ayudhaya 13160, Thailand
Phone: 35-258258～262
Facsimile: 35-221388

**The United Kingdom**

**※MEIDEN EUROPE LTD.**
New Wave Complex,
Bradbourne Drive,
Tilbrook,
Milton Keynes MK7 8BN,
England, U.K.
Phone: 1908-276000
Facsimile: 1908-276010

**The United States**

**※MEIDENSHA CORPORATION**
The American Center Building,
Suite 1110
27777 Franklin Road,
Southfield Michigan 48034,
U.S.A.
Phone: 248-353-2540
Facsimile: 248-353-3150





1999-4ME(3.5L)0.5L